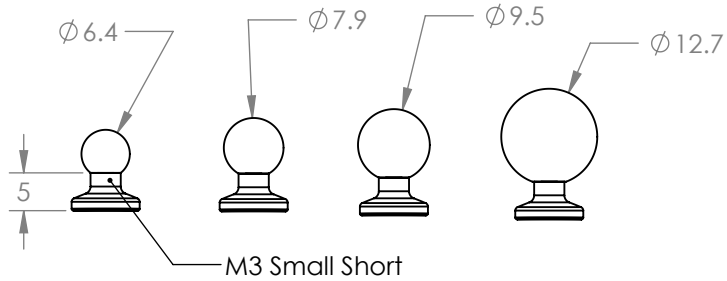

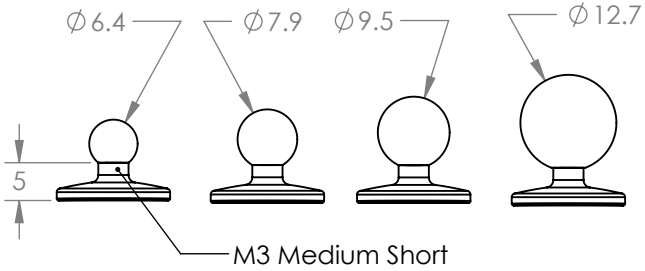

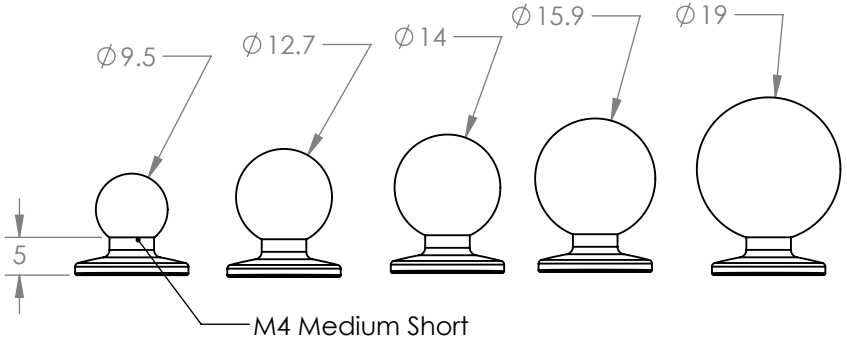

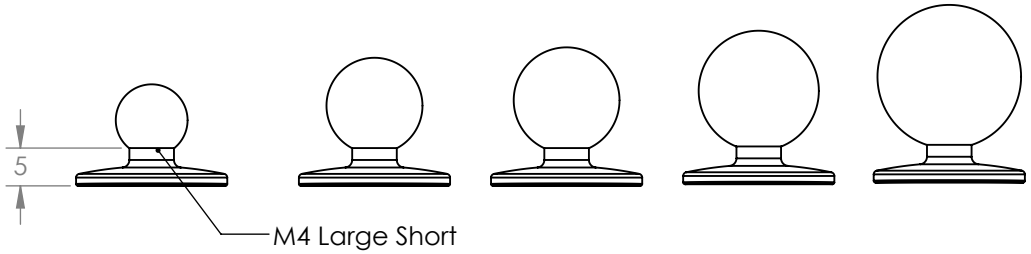

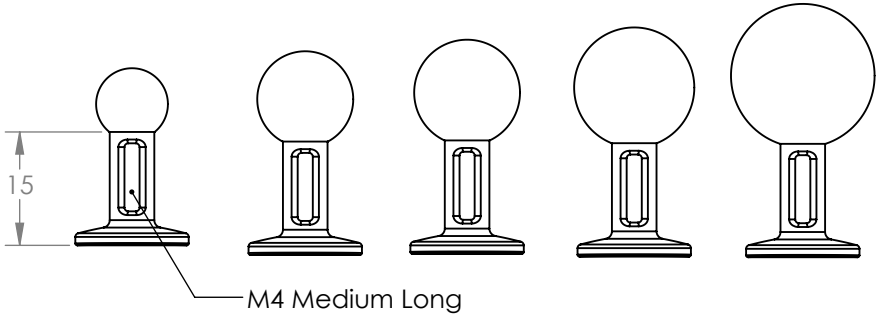

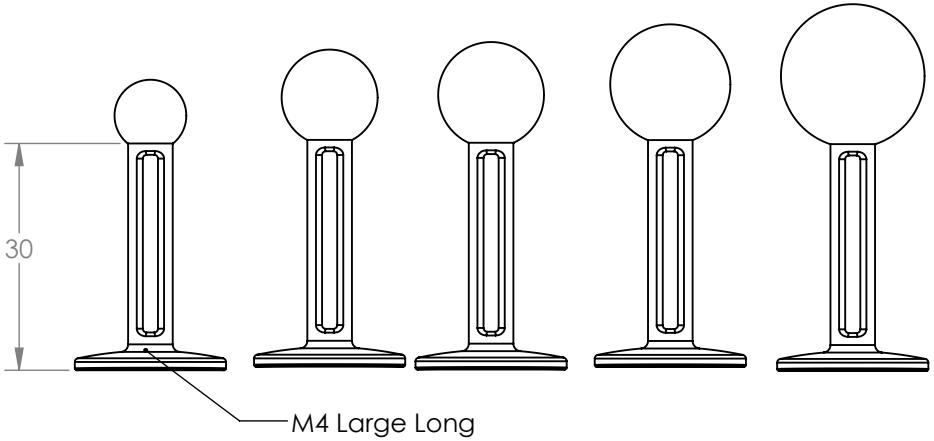

Plastic Marker Bases
4/28/2015